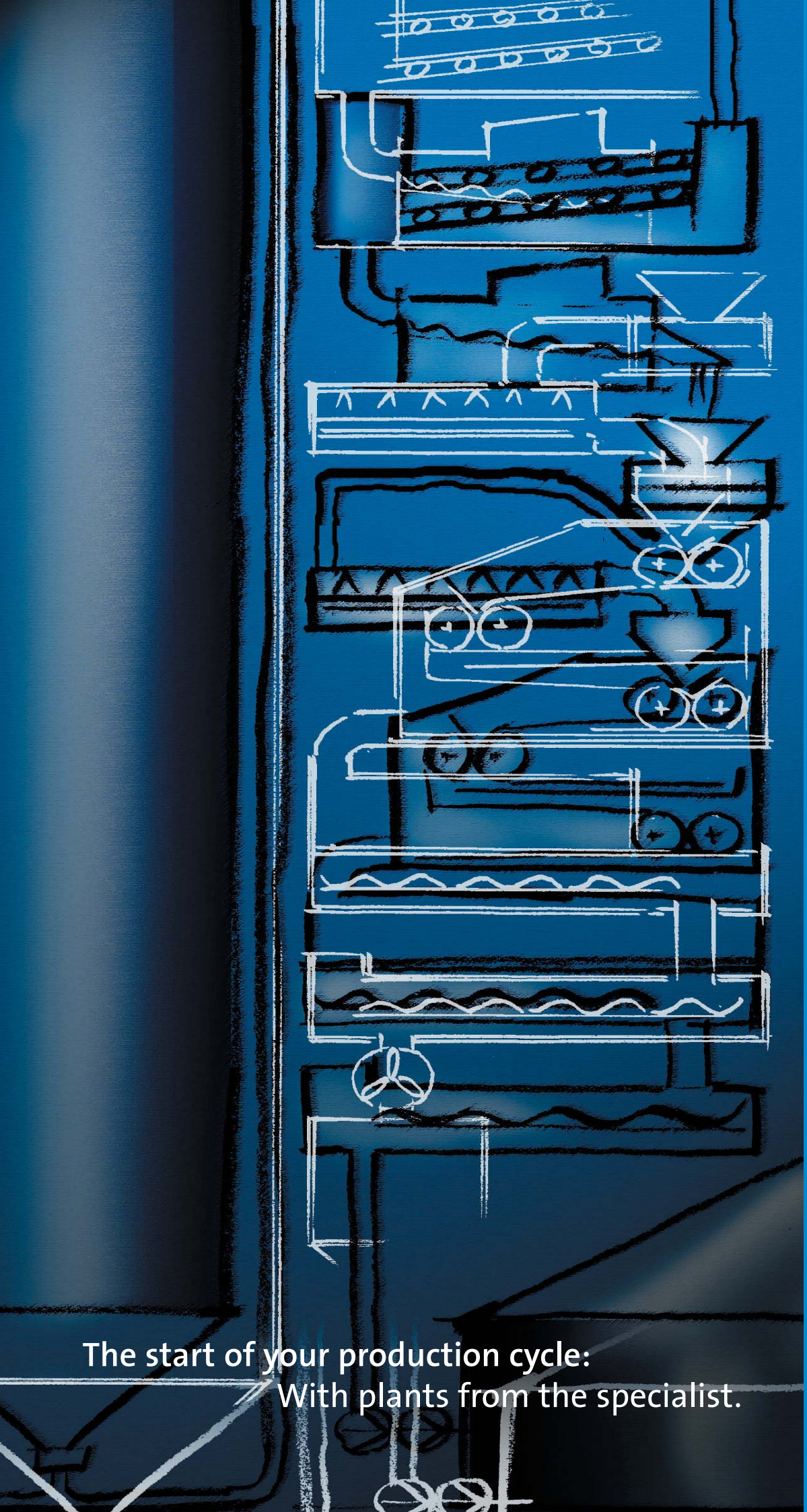

KÜNZEL

From Malt to Mash

The start of your production cycle:
With plants from the specialist.

Künzel Maschinenbau GmbH today symbolizes a modern medium-sized engineering and manufacturing company which concentrates its activities on breweries, and specifically on the first phase in the lengthy procedure leading up to the final product "beer" - from malt intake up to the mash tun.

1922

The company was founded in 1922 by Wilhelm Künzel in Kulmbach and originally focussed on the manufacturing of machinery and equipment components for grain mills.
Based on extensive know-how gained from this segment the company program was later extended to include brewery milling installations as well as plant equipment for malteries.

1957

The first 6-roller grist mill was built in 1957.
Helmut Künzel took over the management of the company in 1969 and concentrated in particular on the expansion of international activities.

1981

In 1981 Wilhelm Künzel GmbH moved to the new facilities in Mainleus, just outside Kulmbach, where the administration, technical centre and production are still domiciled today.

This is where all major plant components are manufactured, such as grist mills, conditioning devices, flat screens, stone and metal separating equipment, conveying equipment etc.

2000

The company suffered an economic downturn in 1999 under the prevailing difficult market conditions, from which it then emerged recovered with a new owner. This was Mr. Hidekazu Miyake and his company, Miyake Industries Co. Ltd. Tokyo, a very successful brewhouse manufacturer who had used Künzel installations in large Japanese breweries for many years. He acquired all shares of his former partner's company and quickly implemented the necessary consolidation measures.

Today

Today Künzel is run by a highly efficient team in the sales and technical department and has a qualified and dedicated workforce in the production, assembly, commissioning and service divisions. The major goal is to serve customers all over the world to their full satisfaction.

The key focus is on the implementation of the complete product lines from malt to mash, for all state-of-the-art technological processes including mills for dry grist or conditioned dry grist, steep conditioning, hammer mills for thin layer mash filters or dispersion pumps.

There are different technical or technological means available for the process from malt to mash. These predominantly differ in the type of grinding and the conditioning.
The course leading from the malt intake through the silo, flat screen, destoner and scales is always the same in this respect.
We design the right system to meet your specific plant requirements and needs.

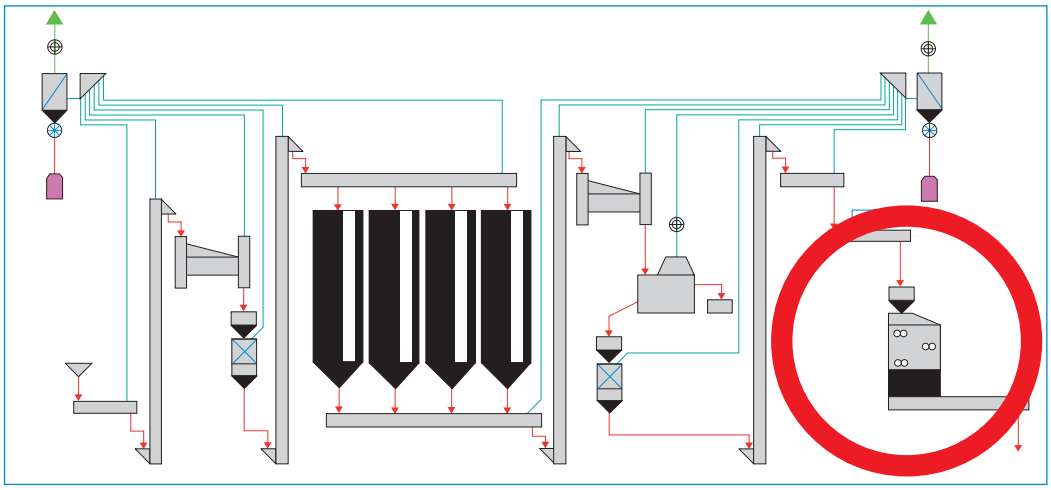

1) The classic process is dry milling, and today this predominantly employs the malt humidification method (malt conditioning).

This method has proven its worth for decades, it meets highest quality requirements, is safe to run, easy in maintenance and is an embodiment preferred by practically all large international brewery groups using lauter tuns.

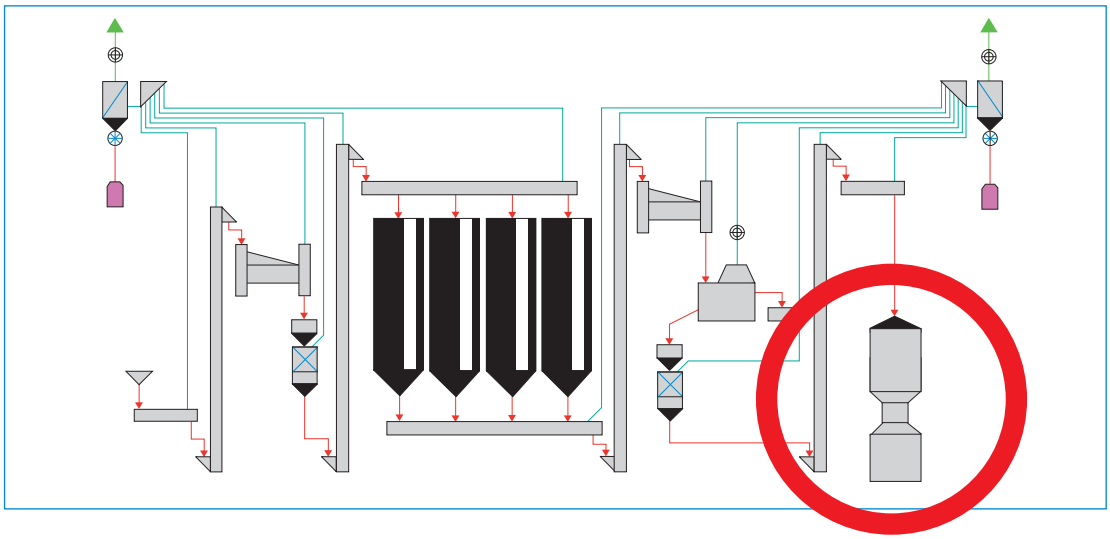

2) A positive alternative with lauter tun operation is the steep conditioning method, which is a further development of wet milling (Huppmann Millstar or Steinecker Variomill). Steeping permits higher lautering speeds and consequently smaller and more cost effective lauter tuns and also requires less installation space.

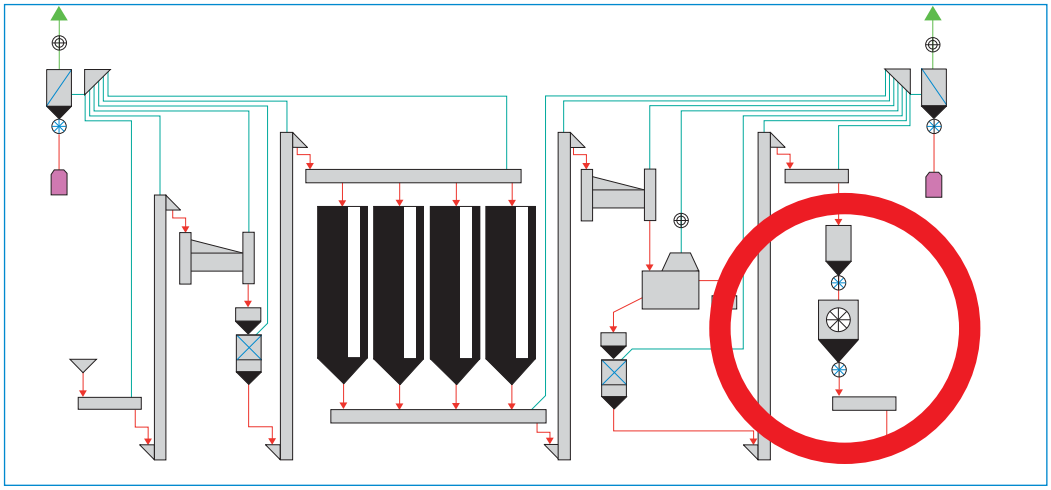

3) The hammer mill is used for charging modern thin layer mash filters. It is capable of processing malt, barley, wheat, rice and sorghum.

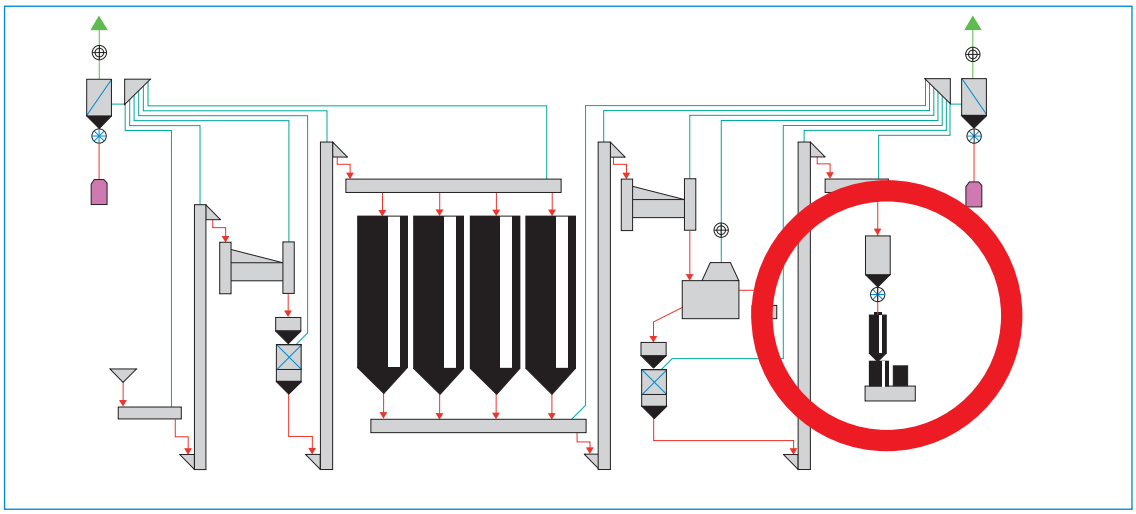

4) The latest system to be applied is the Ziemann Dispax, a rotational milling pump which has successfully been operated to feed thin layer mash filters and to process adjunct for both lauter tuns and mash filters.

Malt intake

The malt is delivered by rail or truck. To this end we design the appropriate intake equipment to meet the local conditions.
Gratings arranged on the inside are designed to retain course components and are either made of standard steel or are of a galvanized design.

Silo plants

We supply fully assembled plants with steel silos for intake and storage of malt and other raw materials.
The silos can be of round or square shapes, with profiled or smooth walls and for installation inside buildings or outdoors.

Conveying equipment

Meticulously designed conveying equipment is essential for a satisfactory operation of the milling installations or malt conveying system as this equipment frequently has to convey very large quantities of material in a gentle and dependable manner. Künzel elevators, Künzel chain conveyors and Künzel screw conveyors feature particularly sturdy designs with high operational reliability.
The program includes pneumatic conveying systems in addition to mechanical conveyors.

Flat screen

The screens are used in grain and malt storing in breweries, malteries and similar types of installations.
The product to be cleaned is fed into the dust-tight screen case. A horizontal rotational movement of the screen case separates course and fine particles from the product, which are then discharged from the machine via lateral outlets.
Capacity: 5 - 60 t/h

Destoner

The machine accomplishes an almost 100 percent separation of heavy particles. The product is applied via an adjustable inlet as a thin film to the surface of the inclined screen. An air flow passes through the screen to keep the product floating. Heavy particles are caught in the screen and discharged.
Output: 2.6 - 13 t/h

Scales

The weighing process must be carried out with utmost accuracy.
For this purpose modern mechanically or electronically operated installations from renowned manufacturers are available.
The installation includes inlet and outlet containers as buffer or collecting vessels.

Dust-removal devices

Künzel case filters are used to separate dust or other powdery products from the air.
These filters boast high efficiency, operate fully automatically and economically.
The filters can be of coated steel or stainless steel. Filter surfaces of 10 - 135 m^2 for a throughput of 3 cbm/m^2 filter surface.

Malt humidifcation worm

Humidification of the dry grist substantially improves lautering properties of the mash and subsequently shortens the lautering time. The malt fed to the screw is moistened with warm water and subsequently undergoes thorough mixing.
Screw design in stainless steel.
Output: 2,500 kg/h, 8,000 kg/h and 12,000 kg/h

Grist mills

The wide program scope includes 9 mill types with 2, 4 and 6 rollers and outputs of 0.1 to 14 t/h.
The mills are designed for dry and conditioned malt, barley or rice.
All mills boast features of highest milling quality, low operating costs and long service life.

Pre-mashing screw

The pre-mashing screw is for minimizing oxygen pickup during the mash-in process.
The equipment is designed as a tubular screw, which ensures a constant and homogeneous mixing of the mash-in product.
By employing a downstream fitted pump it is possible to mash-in from below.
Output: 12,500 kg/h, 25,000 kg/h and 50,000 kg/h

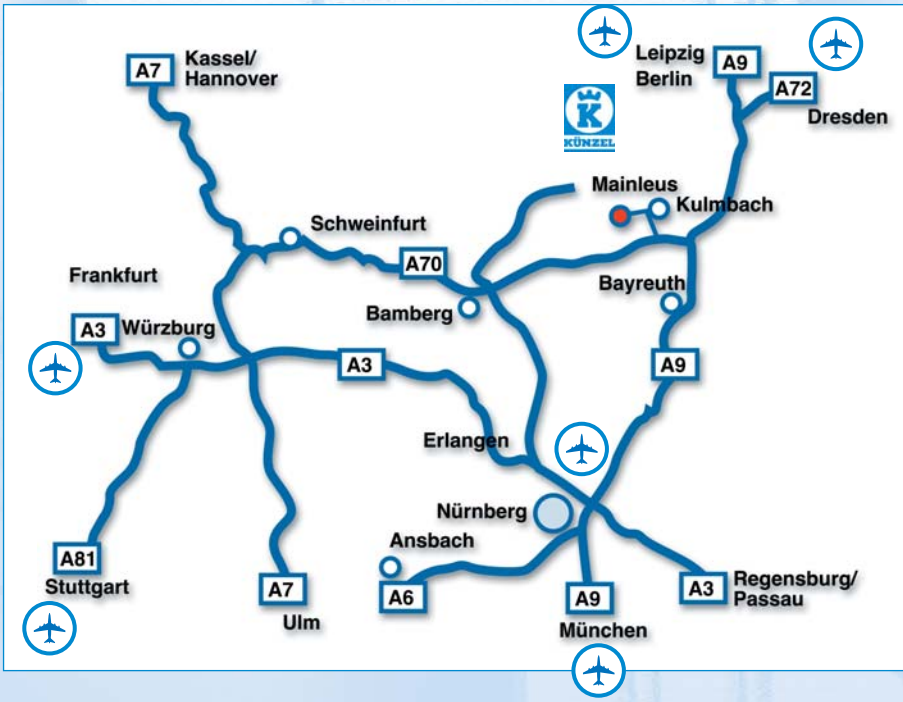

KÜNZEL

Künzel
Maschinenbau GmbH
Industriestrasse 7
D-95336 Mainleus (Kulmbach)

Fon +49 / (0)9229 / 88-0
Fax +49 / (0)9229 / 88-185

e-mail: info@kuenzel.cc
www.kuenzel.cc